Temperature and Humidity Control Specialists

°C

%RH

MICROPROCESSOR-BASED *Series EM70*

INTELLIGENT SERVO CONTROLLER

BASIC FEATURES

- ☐ ***High visibility of Control Motor opening display, which is shown in a bar graph (20 dots) and 7 segments.***
- ☐ ***Zero/Span adjustment of opening can be done automatically at the touch of a single button.***
- ☐ ***By means of the combination of SSR and relay, the drive unit can control directly large capacities (20-240V / 2A).***
- ☐ ***A wide selection of additional functions (optional) is available to suit various requirements. (Events, analog output, external operation, square root extraction, communication function)***
- ☐ ***Dust and splash proof front panel equivalent to IP66***

■ Display

● Position indicator
- Output display color (LED bar graph) : Green
- Display resolution/dot : 5%/20 dots

● Data display
- Display digit/color : 5 digits/7 segments LED green display, Height of character: 14 mm
- Display resolution : 1% (position, desired value of position), 0.1% (input)
- Sampling cycle : 0.2 seconds
- Display range : Position and deviation: –10~110%, Input value: –10.0~110.0%

● Status display : 11 kinds, LED lamps

Position display	(POSITION)/Green
Input display	(INPUT)/Green
Desired value of position/deviation display	(DES/DEV)/Green
Manual action	(MAN)/Green
Reverse action	(RA)/Green
Opening action	(OPEN)/Green
Closing action	(CLOSE)/Green
External (DI) input	(DI1, 2, 3)/Green
Event action	(EV1, 2, 3)/Orange
Stand-by action	(STBY)/Green
Communication status	(COM)/Green

■ Control input

● Current/receiving impedance : 4~20, 0~20 mA DC/100Ω
● Voltage/input impedance : 1~5V, 0~5V, 0~10V DC/1MΩ
● Input filter : 0~99 seconds
● Isolation : Insulated between control input and analog output (not insulated between control input and feedback potentiometer and DI input)

■ Setting

● Setting system : By key switches (6 keys) on front panel

● Setting/selection item
- Display switching : By DISP key switch on front panel
- Auto/manual switching : By MAN/AUTO key switch on front panel
- Zero/span adjustment : Provided with Automatic adjustment function; manual adjustment is also possible (correction of potentiometer error)
- Selection of control characteristics : Direct (DA)/reverse (RA)
- Control characteristics gain setting : Input values corresponding to 0% position and 100% position (scaling function) or position values corresponding to 0% input and 100% input (scaling function)
- Position limiter setting : Higher limit values 1~100%, Lower limit value 0~99% (higher limit>lower limit)
- Setting of speed (inching) : 10~100% (Initial value: 100%, which means no inching) In the case of contact output, setting of speed is not possible.
- Hysteresis : 1/4 of dead band. Fixed to 0.3% when dead band is less than 1.2% of input.
- Dead band setting : 0.2~10.0% of input signal (Intial value: 2.0%)
- Keylock : 3-stage lock

■ Feedback

● Feedback potentiometer rating : Selectable between 100Ω and 2kΩ/three-wire type

■ Control output

● Output type : Contact 240V AC 2A
Combination of SSR and contact 240V AC 2A

■ External operation input (DI)

● Number of points : 3 points (DI1, DI2 and DI3)
● Operable items : (1) Individual assignment to RA, STBY and preset position value is possible.
(2) Assignment to 7 preset position values by binary numerals is possible.
(3) Assignment to 3 preset position values and individual assignment to one of RA, STBY and preset position value is possible.
● Operation : Put in action when non-voltage contact or open collector turns ON.

■ Event output (option)

● Number of event points : 3 points (EV1, EV2 and EV3)
● Types : Potentiometer (higher limit, lower limit, hysteresis variable and stand-by action selectable), input (higher limit, lower limit, hysteresis variable and stand-by action selectable), operation, manual, potentiometer error, input error, and control loop trouble.
● Output rating/structure : 240V AC 1A Resistive load/"a" contact
● Action display : When EV1~EV3 are in action, orange lamp lights.

■ Analog output (option)

● Number/type : 1 point, either position or control input to be selected with scaling functiion
● Analog output/rating : 4~20 mA FS/Load resistance 300Ω max.
● Output accuracy : ±0.5% FS max.
● Isolation : Insulated between analog output and control input and feedback potentiometer

■ Square root extraction (option)

● Position output control by square root extraction of input signals

■ Communication function (option)

- ● Communication type : RS-232C, RS-485
- ● Communication system : RS-232C 3-line type half duplex system & RS-485 2-line type half duplex system {RS-485 is of half-duplex multi-drop (bus) system}
- ● Synchronization system : Start-stop synchronization system
- ● Communication speed : 1200, 2400, 4800, 9600, 19200 bps

■ General specifications

- ● Data storage : Non-volatile memory
- ● Ambient temp./humidity range : –10~+50˚C/90% RH or less (no dew condensation)
- ● Storage temperature : –20~+65˚C
- ● Power supply : 100~240V AC±10% 50/60Hz
- ● Power consumption : 13VA (240V AC)
- ● Applicable standards : Safety: IEC1010-1 and EN61010-1/EMC: EN61326
- ● Insulation resistance : Between input/output terminals and power terminal: 500V DC 20MΩ min.
  Between power terminal and ground terminal: 500V DC 20MΩ min.
- ● Dielectric strength : Between input/output terminals and power terminal: 2300V AC 1 minute
  Between power terminal and ground terminal: 1500V AC 1 minute
- ● Protective structure : Only front panel has dust-proof and drip-proof structure. (IP66 equivalent)
- ● Material of case : PPO resin molding (equivalent to UL 94 V-1)
- ● External dimensions : H96 × W96 × D111 (Panel depth: 100) mm
- ● Mounting/panel thickness : Push-in panel (one-touch mount)/1~4mm
- ● Panel cutout/weight : 92 × 92mm/approx. 460 g

ORDERING INFORMATION

ITEMS	CODE	SPECIFICATIONS
SERIES	EM70-	96×96 DIN size, Intelligent servo contoroller
CONTROL INPUT	4	Current 4~20 / 0~20mA DC Receiving impedance: 100Ω
	6	Voltage 1~5 / 0~5 / 0~10 V DC Input impedance: 1MΩ min.
CONTROL OUTPUT	Y-	Contact 240V AC 2A Inductive load
	S-	Combination of SSR and contact 240 V AC / 2A Inductive load
EVENT OUTPUT	0	Without
	1	Contact output (1a) / 3 points
ANALOG OUTPUT	0	Without
	4	4~20mA DC Load resistance: 300Ω max.
SQUARE ROOT EXTRACTION	0	Without
	1	Output by square root extraction of control input signal
COMMUNICATION	0	Without
	5	RS-485
	7	RS-232C
REMARKS	0	Without
	9	With (Please consult before ordering.)

Wiring Example

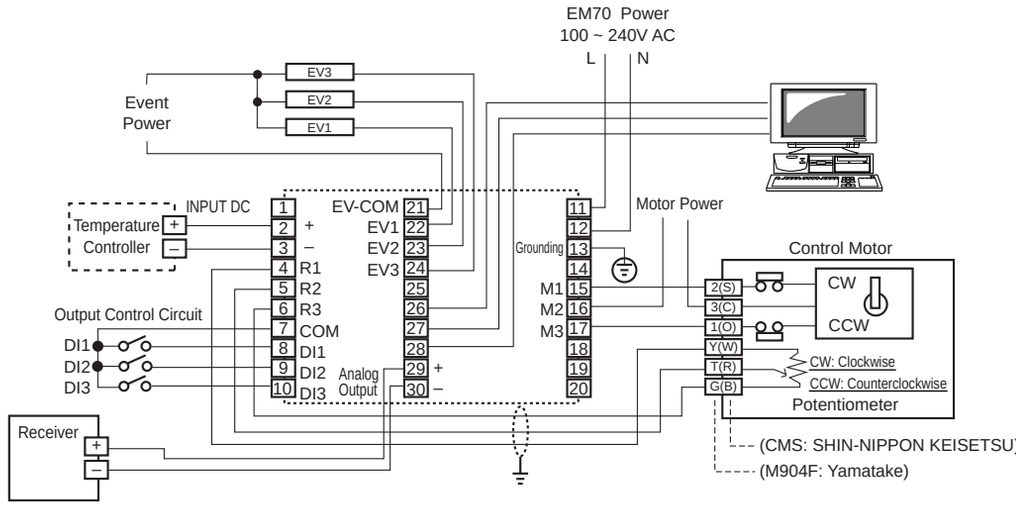

EXTERNAL DIMENSIONS & PANEL CUTOUT

Series EM70

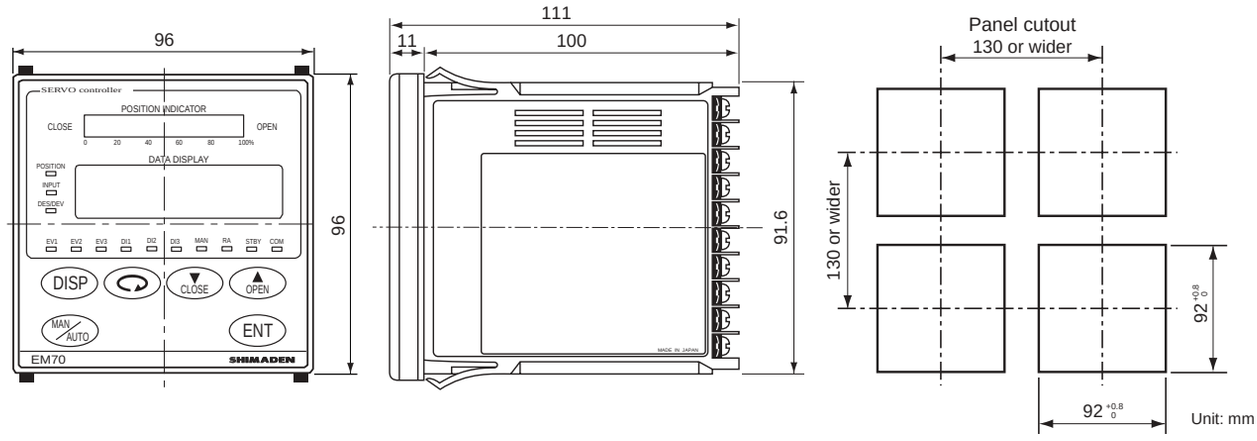

TERMINAL ARRANGEMENT

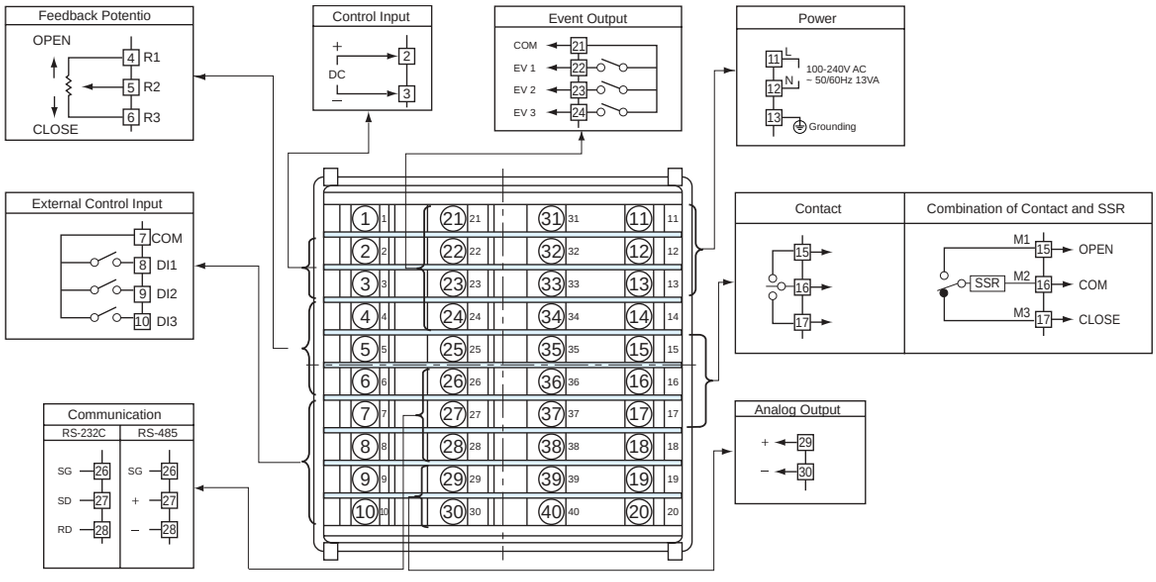

TERMINAL COVER (AVAILABLE SEPARATELY)

Model	
EM70	QCR003

Material/Appearance: PVc/transparent
Thickness: 1mm

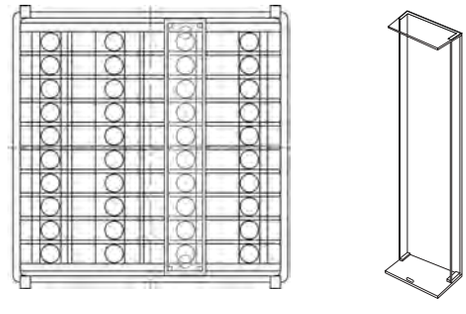

⚠ Warning

- The EM70 series is designed for the control of control motors and other physical values for general industrial equipment. Please avoid its use for something that may have serious effect on the human body or take safety measures before using the equipment. No warranty, express or implied, is valid if used without proper safety measures.

⚠ Caution

- If the possibility of loss or damage to your system or property as a result of failure of any part of the process exists, proper safety measures must be made before the instrument is put into use so as to prevent the occurrence of trouble.

ISO 9001

(The contents of this brochure are subject to change without notice.)

TASHIKA BOEKI SHOKAI K.K.
1-12, Kaiyo-cho, Ashiya, 659-0035, JAPAN
Tel: + 81-797-23-9035 Fax: + 81-797-23-2105
e-mail: sales@tashika.co.jp URL: www.tashika.co.jp

02CEM70300ILC